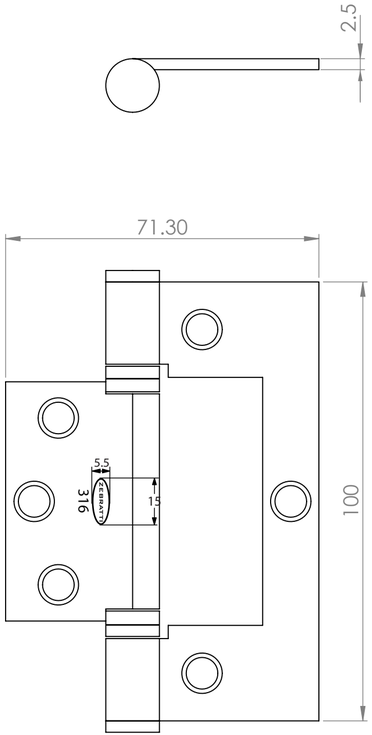
2.5
71.30
100
5.5
316
15

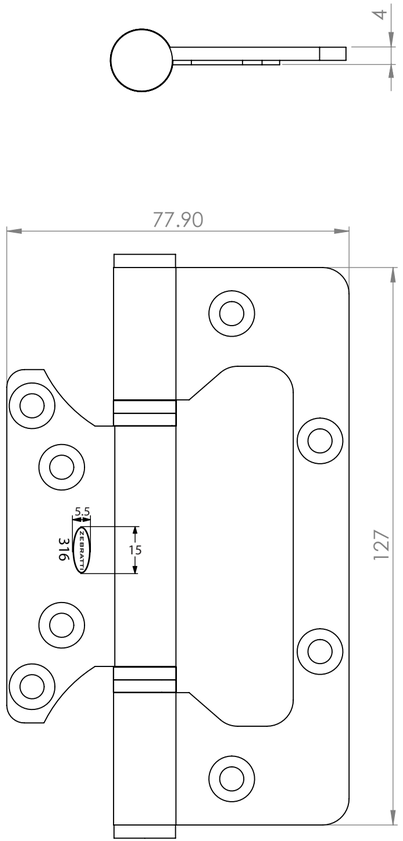
4
77.90
127
5.5
316
15

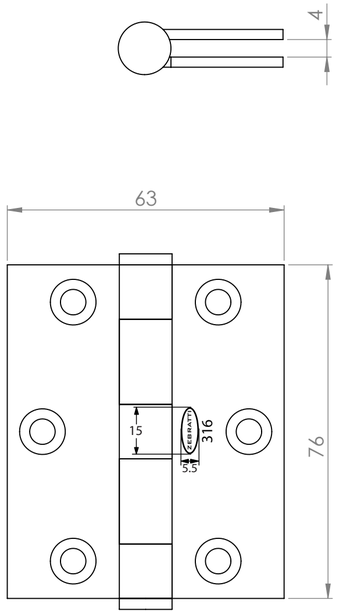
4
63
76
15
316
5.5

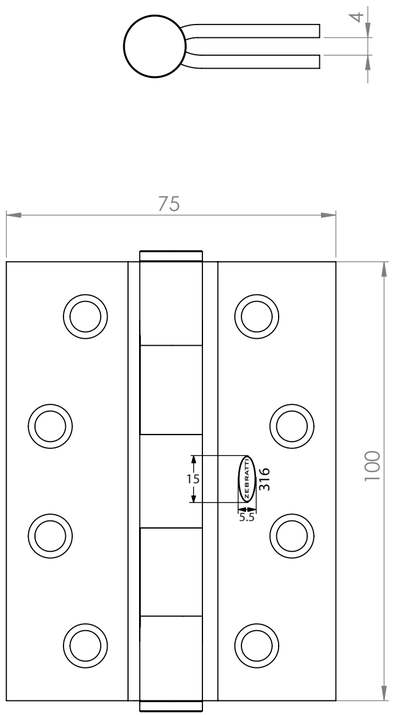
4
75
100
15
316
5.5

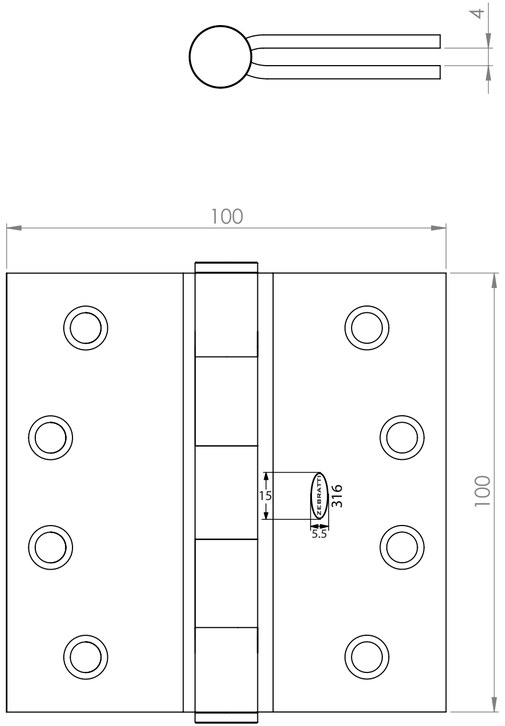
4
100
100
15
316
5.5